FM-4-2

MINI-FOLLOWER ARM POTENTIOMETER

4" ARM, 2' CABLE

Resistance: 500 ohms
Electrical Angle : 65°
Wiper open circuited outside active range
Mechanical Angle: 360° (No stops)

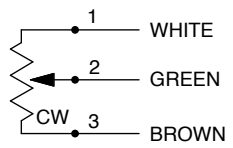

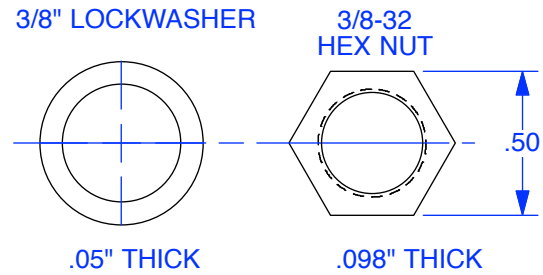

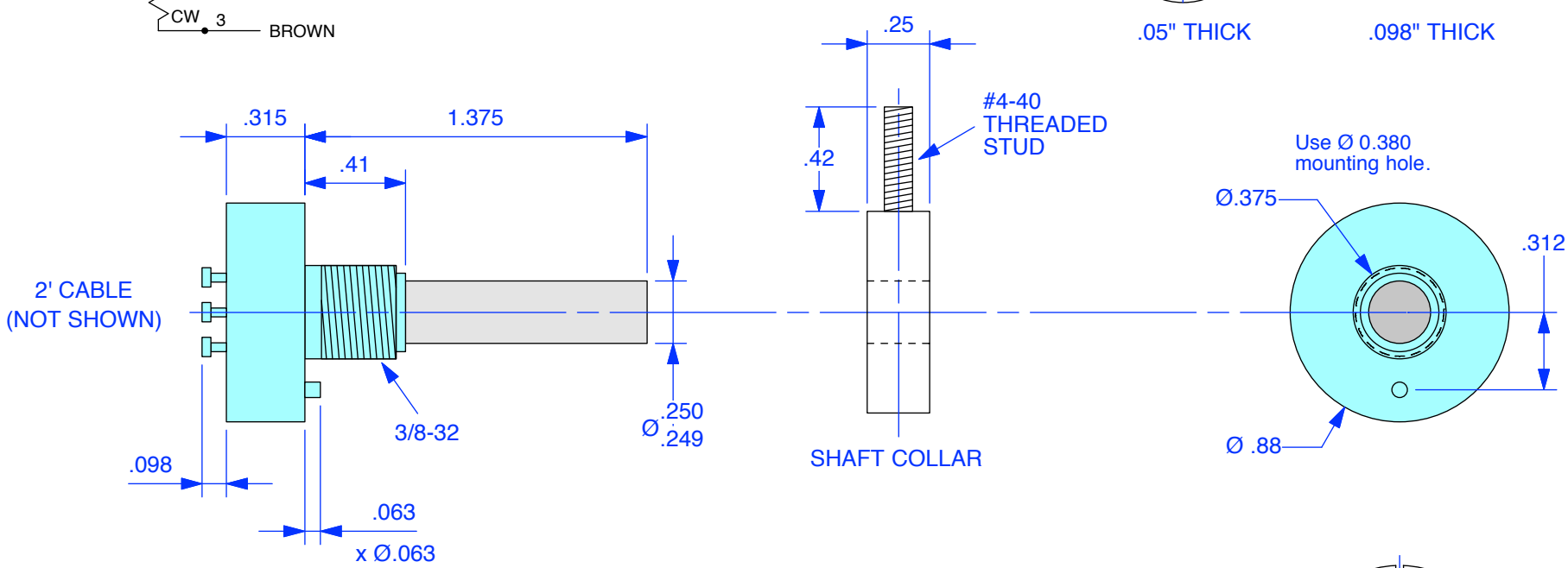

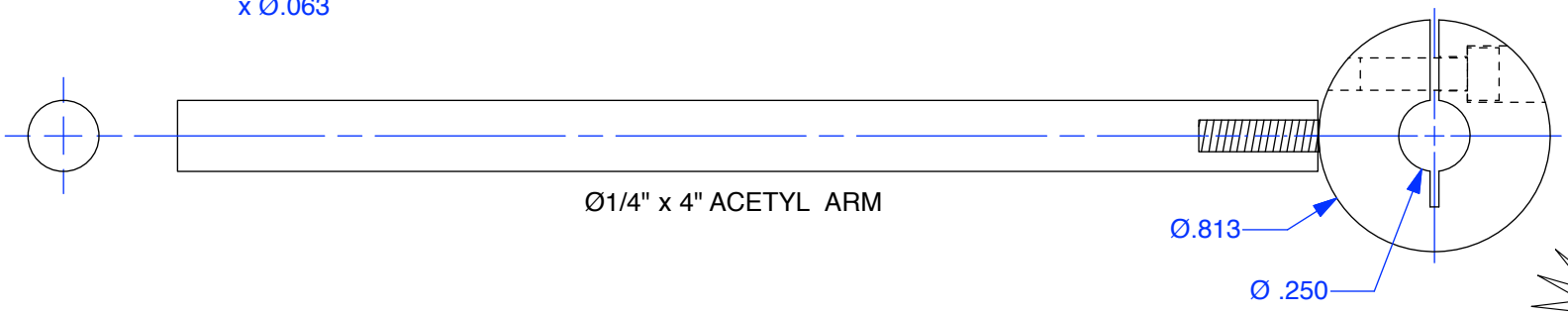

Drawn:	8/13
Change: .31 was .25	6/18
Change: Added Part #	6/18

PLACID
INDUSTRIES