HYSTERESIS BRAKE H85 - 2

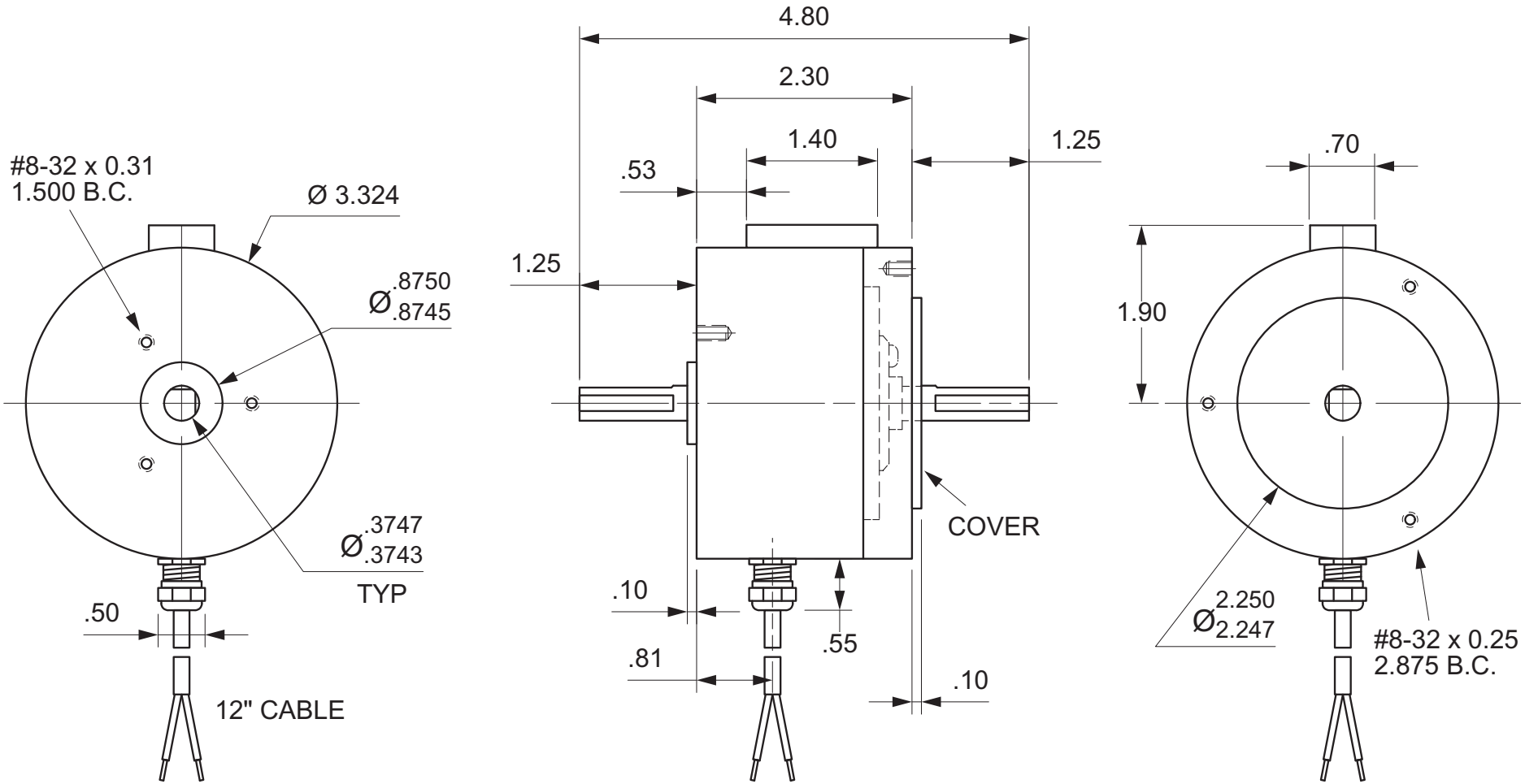

Units : inches
Scale : 60%

Drawn 9/27/01
Changed 9/27/01

Elmira, NY 14901 USA
Telephone: 518-523-2422
www.placidindustries.com

PLACID INDUSTRIES